Work Order ID 68743

Thursday, April 21, 2011 8:16:58 AM

Item ID: D350-636-215 **Accept** **Setup Start** **Stop**

Revision ID:

Item Name: Skidtube STD LH, Deluxe

Start Date: 4/20/2011 **Start Qty:** 1.00 **Cust Item ID:**

Required Date: 4/25/2011 **Req'd Qty:** 1.00 **Customer:**

Reference:

Approvals: **Process Plan:** _____ **Date:** 11-04-21 **Tooling:** _____ **Date:** _____ **Run Start** **Stop**

QC: _____ **Date:** _____ **SPC (Y/N):** _____ **Date:** _____

Sequence ID/ Work Center ID	Operation Description	Set Up/ Run Hours	Tool ID	Tool #	Plan Code	Accept Qty	Reject Qty	Reject Number	Insp. Stamp
Draw Nbr	**Revision Nbr**								
IIN-D350-636	H								
100		0.00							
DC	**Memo**	0.00							
Document Control	Photocopy bluefile & type labels per PPPD350-636-215 CHG002								
110	Assemble as per dwg	0.00							
HandFinish	**Memo**	0.00							
Hand Finishing	1- Assemble Toe kit, Wedge kit and Tow ring kit to D350-636-015 as per IIN-D350-636 page:15-16-17-20								
120	QC5- Inspect part completeness to step on W/O	0.00							
QC	**Memo**	0.00							
Quality Control									

4 8 11/06/15

CL 11-6-14

11/05/12

11 06 13 ①

B68743

Dart Aerospace Ltd

W/O:		WORK ORDER CHANGES					
DATE	STEP	PROCEDURE CHANGE	By	Date	Qty	Approval Chief Eng / Prod Mgr	Approval QC Inspector

Part No: _____ **PAR #:** _____ **Fault Category:** _____ **NCR:** Yes No **DQA:** _____ **Date:** _____

Resolution: _____ **Disposition:** _____ **QA: N/C Closed:** _____ **Date:** _____

NCR:		WORK ORDER NON-CONFORMANCE (NCR)						
DATE	STEP	Description of NC Section A	Corrective Action Section B			Verification Section C	Approval Chief Eng	Approval QC Inspector
			Initial Chief Eng	Action Description Chief Eng	Sign & Date			

NOTE: Date & initial all entries

Work Order ID 68743

Thursday, April 21, 2011 8:16:58 AM

Item ID: D350-636-215 **Accept** **Setup Start** **Stop**

Revision ID:

Item Name: Skidtube STD LH, Deluxe

Start Date: 4/20/2011 **Start Qty:** 1.00 **Cust Item ID:**

Required Date: 4/25/2011 **Req'd Qty:** 1.00 **Customer:**

Reference:

Run Start **Stop**

Approvals: **Process Plan:** _____ **Date:** _____ **Tooling:** _____ **Date:** _____

QC: _____ **Date:** _____ **SPC (Y/N):** _____ **Date:** _____

Sequence ID/ Work Center ID	Operation Description	Set Up/ Run Hours	Tool ID	Tool #	Plan Code	Accept Qty	Reject Qty	Reject Number	Insp. Stamp
150		0.00							
Packaging	**Memo**	0.00							
Packaging	Identify and pack for shipping as per PPP D350-636-215 Location: _____ PPP rev: A								
160	QC21- Final Inspection - Work Order Release	0.00							
QC	**Memo**	0.00							
Quality Control									

11/6/15

11/6/15

MF

11-06-15

Dart Aerospace Ltd

W/O:		WORK ORDER CHANGES					
DATE	STEP	PROCEDURE CHANGE	By	Date	Qty	Approval Chief Eng / Prod Mgr	Approval QC Inspector

Part No: _____ **PAR #:** _____ **Fault Category:** _____ **NCR:** Yes No **DQA:** _____ **Date:** _____

Resolution: _____ **Disposition:** _____ **QA: N/C Closed:** _____ **Date:** _____

NCR:		WORK ORDER NON-CONFORMANCE (NCR)						
DATE	STEP	Description of NC Section A	Corrective Action Section B			Verification Section C	Approval Chief Eng	Approval QC Inspector
			Initial Chief Eng	Action Description Chief Eng	Sign & Date			

NOTE: Date & initial all entries

Picklist Print

Thursday, April 21, 2011 8:17:06 AM

Work Order ID: 68743

Parent Item: D350-636-215

Parent Item Name: Skidtube STD LH, Deluxe

Start Date: 4/20/2011 **Required Date:** 4/25/2011

Start Qty: 1.00 **Required Qty:** 1.00

Comments: IPP Rev:A 10.10.04 new issue DD verf:EC IPP Rev:B
11.04.14 ecn11-553 DD verf:EC

Component Item ID/ Item Name	Replacement Item ID	Mfg/ Purch	Bin Item	Primary Location	Last Location	Route Seq ID	Unit of Measure	Qty on Hand	Qty per Kit	Total Qty	Qty Issued	Date Issued	Status
D350-636-015		Manufactured	No			110	Each	0.0000	1	1			
Skidtube STD w/ Training Wearplates, LH										B68738 (x1)		4/20/11	
D350-636-101		Manufactured	No			110	Each	5.0000	1	1			
Toe Step, LH/RH													
				Location			Loc Qty	Loc Code					
				FG021			5						
					67316		5						
D350-636-105A		Manufactured	No			110	Each	4.0000	1	1			
Wedge Installation										B68365			
				Location			Loc Qty	Loc Code					
				FG021	68365 ~~67317~~		4					11/05/12	
							4						
D350-636-109		Manufactured	No			110	Each	0.0000	1	1			
Tow Ring Installation				68742								11/05/12	

Dart Aerospace Ltd

W/O:		WORK ORDER CHANGES					
DATE	STEP	PROCEDURE CHANGE	By	Date	Qty	Approval Chief Eng / Prod Mgr	Approval QC Inspector

Part No: _____ **PAR #:** _____ **Fault Category:** _____ **NCR:** Yes No **DQA:** _____ **Date:** _____

Resolution: _____ **Disposition:** _____ **QA: N/C Closed:** _____ **Date:** _____

NCR:		WORK ORDER NON-CONFORMANCE (NCR)						
DATE	STEP	Description of NC Section A	Corrective Action Section B			Verification Section C	Approval Chief Eng	Approval QC Inspector
			Initial Chief Eng	Action Description Chief Eng	Sign & Date			

NOTE: Date & initial all entries

H:\fFORMS\Quality Assurance\approved QA\NCRWO RevE

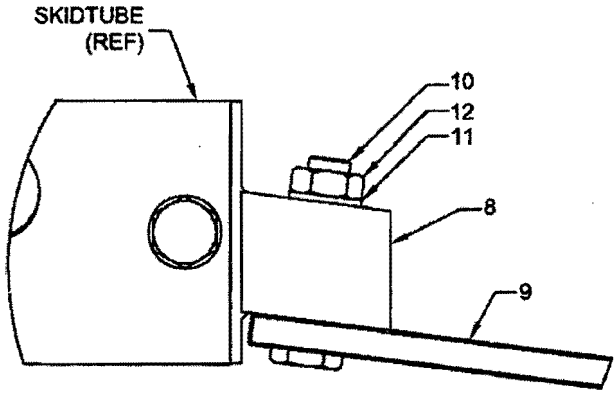

DETAIL D
1 PL PER SKIDTUBE

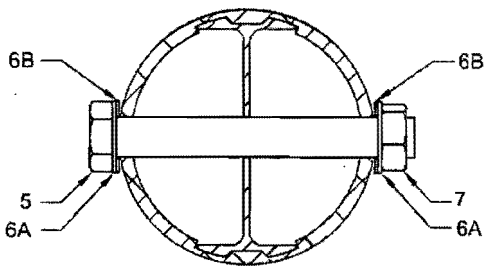

SECTION E-E
(D350-636-011/-012/-013/-014 SKIDTUBES
AT CHG 003 ONLY)

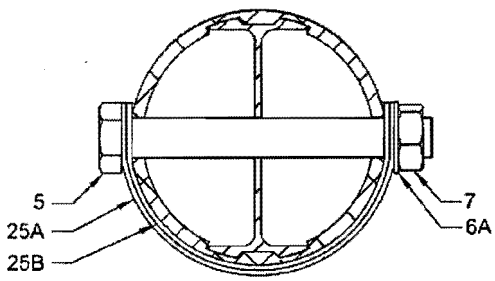

SECTION Q-Q
(D350-636-011/-012/-013/-014 SKIDTUBES
AT CHG 004 OR SUBSEQUENT)

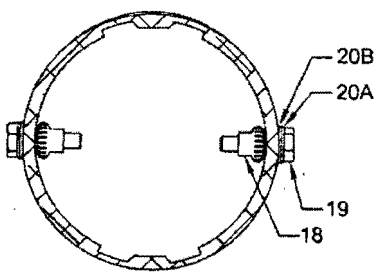

SECTION F-F
2 PL PER SKIDTUBE

SHOP COPY
RETURN TO
ENGINEERING
UNCONTROLLED COPY
SUBJECT TO AMENDMENT
WITHOUT NOTICE
WORK ORDER
NO. 65743
pd 11-09-21

• COPYRIGHT © 2010 BY DART AEROSPACE USA, INC •
THIS DOCUMENT IS PRIVATE AND CONFIDENTIAL AND IS SUPPLIED ON THE EXPRESS CONDITION THAT IT IS NOT TO BE USED FOR ANY PURPOSE OR COPIED OR COMMUNICATED TO ANY OTHER PERSON WITHOUT WRITTEN PERMISSION FROM DART AEROSPACE USA, INC.

Dart Aerospace Ltd

W/O:		WORK ORDER CHANGES					
DATE	STEP	PROCEDURE CHANGE	By	Date	Qty	Approval Chief Eng / Prod Mgr	Approval QC Inspector

Part No: _____ **PAR #:** _____ **Fault Category:** _____ **NCR:** Yes No **DQA:** _____ **Date:** _____

Resolution: _____ **Disposition:** _____ **QA: N/C Closed:** _____ **Date:** _____

NCR:		WORK ORDER NON-CONFORMANCE (NCR)						
DATE	STEP	Description of NC Section A	Corrective Action Section B			Verification Section C	Approval Chief Eng	Approval QC Inspector
			Initial Chief Eng	Action Description Chief Eng	Sign & Date			

NOTE: Date & initial all entries

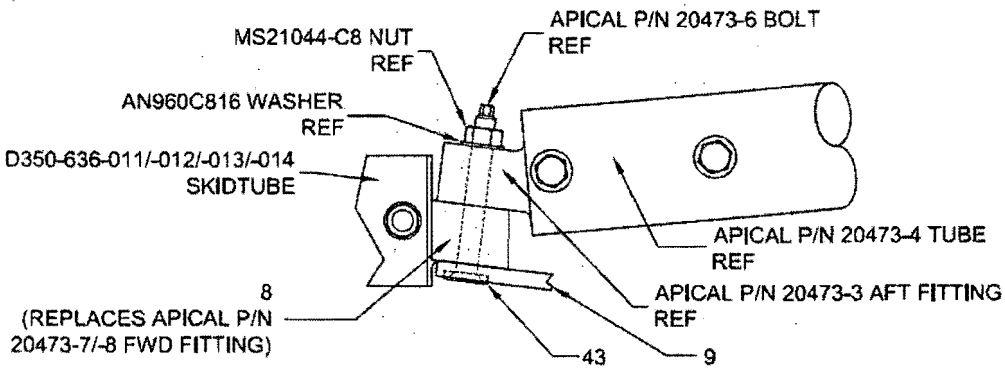

DETAIL G
(APICAL CYLINDRICAL AND TRI-BAG INSTALLATIONS)
1 PL PER SKIDTUBE

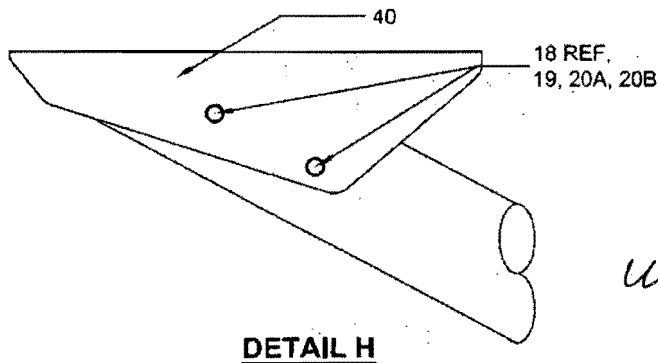

w/068743

DETAIL H
(D350-636-101 TOE STEP)
1 PL PER SKIDTUBE

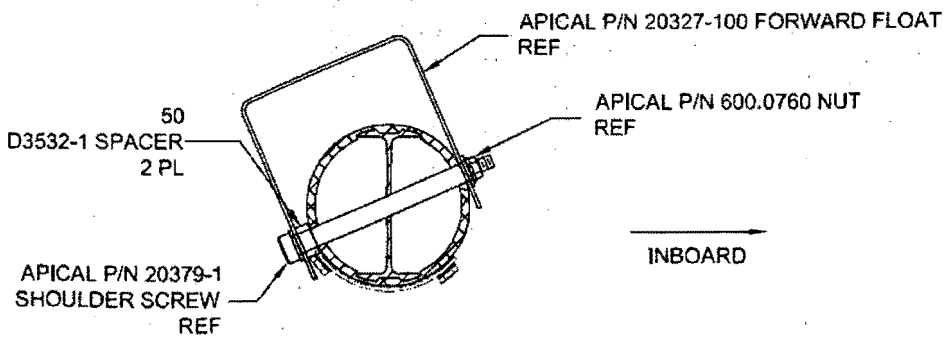

SECTION N-N
(LH SHOWN, RH OPPOSITE)
(D350-636-011/-012 WITH APICAL CYLINDRICAL FLOATS ONLY)

• COPYRIGHT © 2010 BY DART AEROSPACE USA, INC •
THIS DOCUMENT IS PRIVATE AND CONFIDENTIAL AND IS SUPPLIED ON THE EXPRESS CONDITION THAT IT IS NOT TO BE USED FOR ANY PURPOSE OR COPIED OR COMMUNICATED TO ANY OTHER PERSON WITHOUT WRITTEN PERMISSION FROM DART AEROSPACE USA, INC.

Dart Aerospace Ltd

W/O:		WORK ORDER CHANGES					
DATE	STEP	PROCEDURE CHANGE	By	Date	Qty	Approval Chief Eng / Prod Mgr	Approval QC Inspector

Part No: _____ **PAR #:** _____ **Fault Category:** _____ **NCR:** Yes No **DQA:** _____ **Date:** _____

Resolution: _____ **Disposition:** _____ **QA: N/C Closed:** _____ **Date:** _____

NCR:		WORK ORDER NON-CONFORMANCE (NCR)						
DATE	STEP	Description of NC Section A	Corrective Action Section B			Verification Section C	Approval Chief Eng	Approval QC Inspector
			Initial Chief Eng	Action Description Chief Eng	Sign & Date			

NOTE: Date & initial all entries

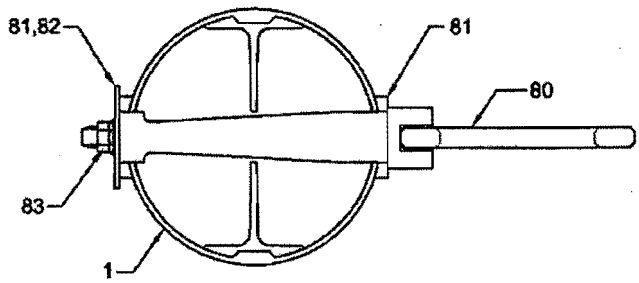

SECTION R-R
SHOWN WITH DRILLED Ø0.625" HOLE &
D350-636-109 TOW RING KIT

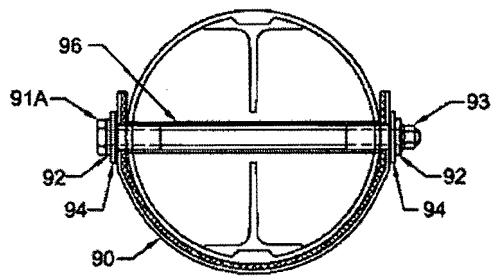

w/o 68743

SECTION S-S
D350-636-015/-016/-017/-018/-215/-216/-217/-218
SKIDTUBES, 3 PL

• COPYRIGHT © 2010 BY DART AEROSPACE USA, INC •
THIS DOCUMENT IS PRIVATE AND CONFIDENTIAL AND IS SUPPLIED ON THE EXPRESS CONDITION THAT IT IS NOT TO BE USED FOR ANY PURPOSE OR COPIED OR COMMUNICATED TO ANY OTHER PERSON WITHOUT WRITTEN PERMISSION FROM DART AEROSPACE USA, INC.

Dart Aerospace Ltd

W/O:		WORK ORDER CHANGES					
DATE	STEP	PROCEDURE CHANGE	By	Date	Qty	Approval Chief Eng / Prod Mgr	Approval QC Inspector

Part No: _____ **PAR #:** _____ **Fault Category:** _____ **NCR:** Yes No **DQA:** _____ **Date:** _____

Resolution: _____ **Disposition:** _____ **QA: N/C Closed:** _____ **Date:** _____

NCR:		WORK ORDER NON-CONFORMANCE (NCR)						
DATE	STEP	Description of NC Section A	Corrective Action Section B			Verification Section C	Approval Chief Eng	Approval QC Inspector
			Initial Chief Eng	Action Description Chief Eng	Sign & Date			

NOTE: Date & initial all entries

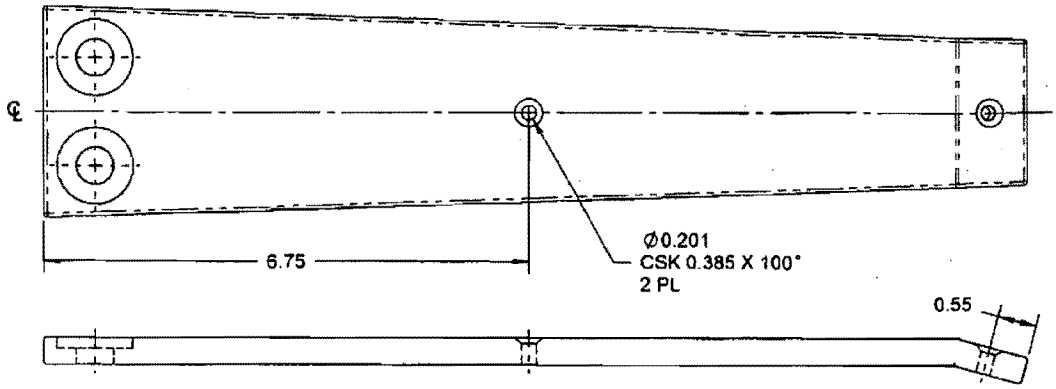

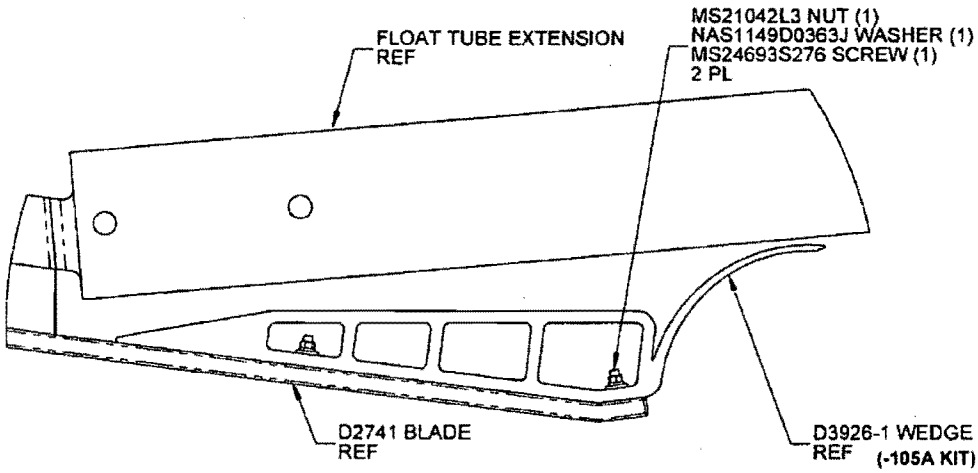

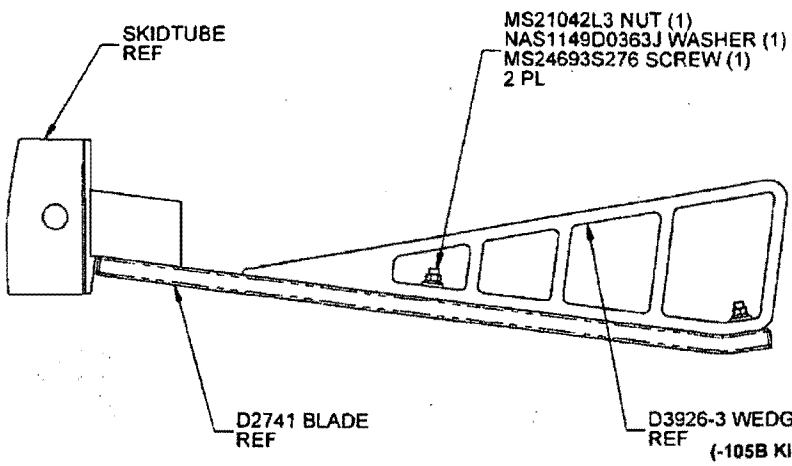

w/068743

Figure 4: D350-636-105A/-105B WEDGE KIT INSTALLATION

• COPYRIGHT © 2010 BY DART AEROSPACE USA, INC •
THIS DOCUMENT IS PRIVATE AND CONFIDENTIAL AND IS SUPPLIED ON THE EXPRESS CONDITION THAT IT IS NOT TO BE USED FOR ANY PURPOSE OR COPIED OR COMMUNICATED TO ANY OTHER PERSON WITHOUT WRITTEN PERMISSION FROM DART AEROSPACE USA, INC.

Dart Aerospace Ltd

W/O:		WORK ORDER CHANGES					
DATE	STEP	PROCEDURE CHANGE	By	Date	Qty	Approval Chief Eng / Prod Mgr	Approval QC Inspector

Part No: _____ **PAR #:** _____ **Fault Category:** _____ **NCR:** Yes No **DQA:** _____ **Date:** _____

Resolution: _____ **Disposition:** _____ **QA: N/C Closed:** _____ **Date:** _____

NCR:		WORK ORDER NON-CONFORMANCE (NCR)						
DATE	STEP	Description of NC Section A	Corrective Action Section B			Verification Section C	Approval Chief Eng	Approval QC Inspector
			Initial Chief Eng	Action Description Chief Eng	Sign & Date			

NOTE: Date & initial all entries